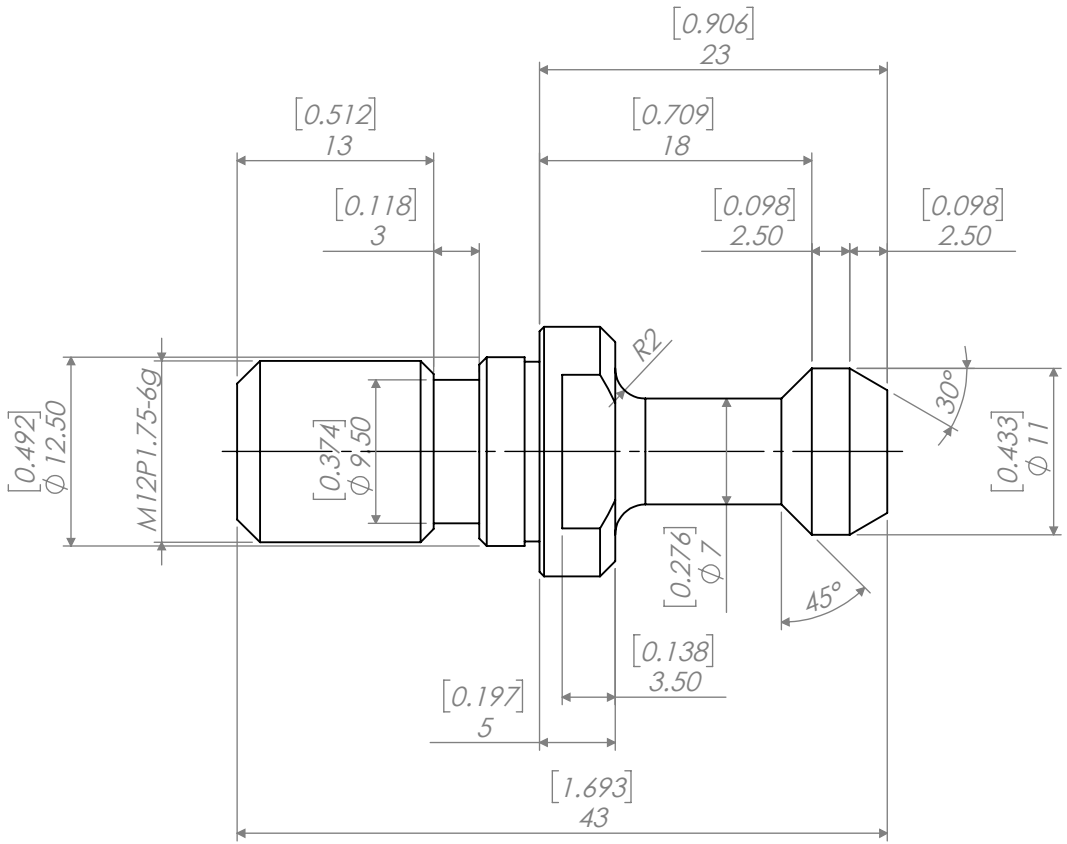

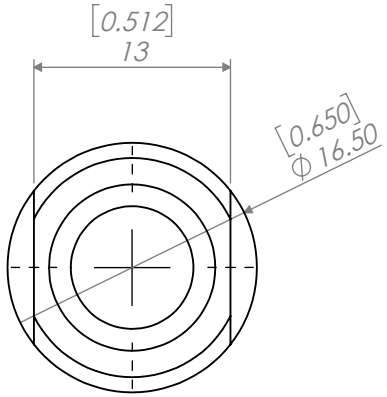

REVISIONS			
REV.	DESCRIPTION	DATE	APPROVED

NOTES:

MATERIAL: 4320 STEEL

UNLESS OTHERWISE SPECIFIED:

DIMENSIONS ARE IN MM [INCH]

DIMENSIONS ARE FOR REFERENCE ONLY. DRAWING IS SUBJECT TO CHANGE WITHOUT FURTHER NOTICE.

INTERPRET GEOMETRIC TOLERANCING PER: ASME Y 14.5M

THIRD ANGLE PROJECTION

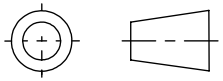

	NAME	DATE
DRAWN	EB	8/22/17
CHECKED		
ENG APPR.		
MFG APPR.		
Q.A.		

PROPRIETARY AND CONFIDENTIAL

THE INFORMATION CONTAINED IN THIS DRAWING IS THE SOLE PROPERTY OF LYNDEX NIKKEN. ANY REPRODUCTION IN PART OR AS A WHOLE WITHOUT THE WRITTEN PERMISSION OF LYNDEX NIKKEN IS PROHIBITED.

PULL STUD BT30 (P30T)

LYNDEX NIKKEN

SIZE	DWG. NO.	REV
A	B30-4500	
SCALE: 2/1		SHEET 1 OF 1

5 4 3 2 1