Symbol	Date	Rev. by	Notice	Check
1 x				
2 x				
3 x				
4 x				

NIKKEN KOSAKUSHO WORKS.,LTD.All Rights Reserved .

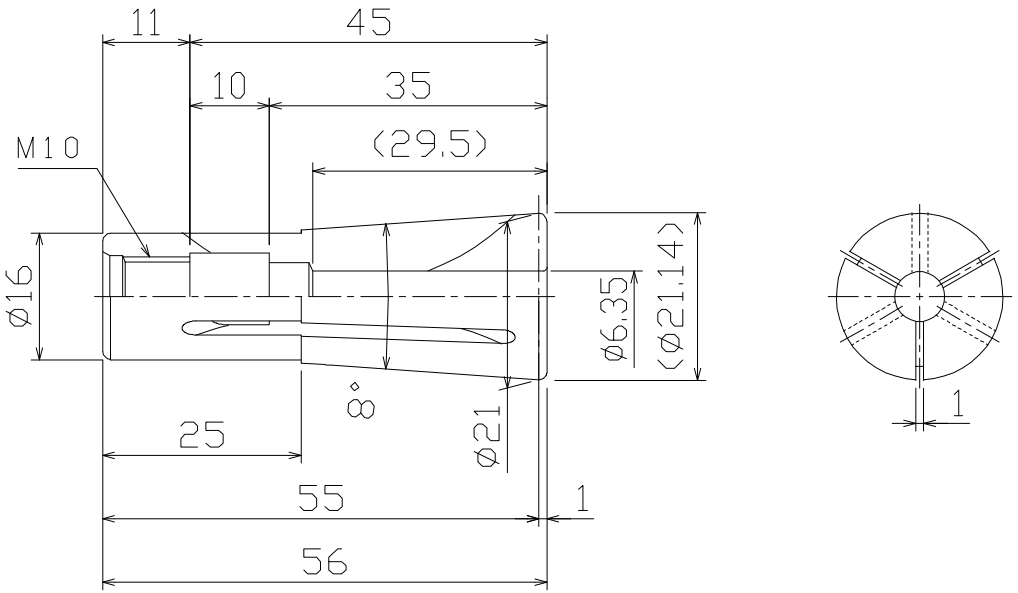

KIND	TITLE	CUSTOMER		
VMK12	VMK Collet			
MACHINE MODEL	CODE NO.	DESIGNED	CHECKED	APPROVED
	VMK12-1/4	S. CHIKAMURA		
SCALE 1:1	NIKKEN KOSAKUSHO WORKS, LTD.	DIR-NAME	MKA1	
DATE 2023. 08. 17		DRWG NO.	MKA15-02009/0	