Symbol	Date	Rev. by	Notice	Check
△1 x 1	230417	S.C.	IMPROVE	
△2 x				
△3 x				
△4 x				

NIKKEN KOSAKUSHO WORKS., LTD. ALL Rights Reserved

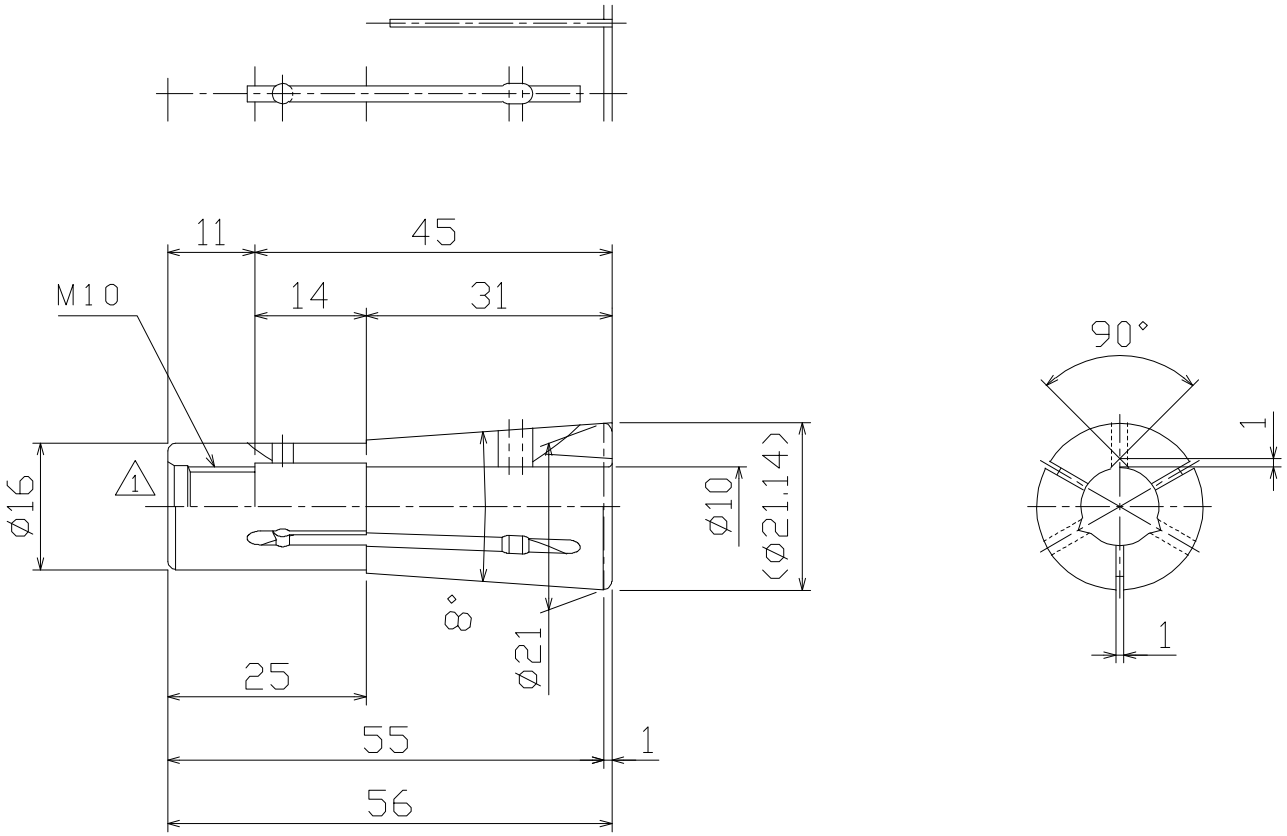

KIND	TITLE	CUSTOMER		
VMK12	VMK Collet			
MACHINE MODEL	CODE NO.	DESIGNED	CHECKED	APPROVED
	VMK12-10J	K.GOTO		
SCALE 1 : 1	NIKKEN KOSAKUSHO WORKS, LTD.	DIR-NAME	MKA1	
DATE 2017.02.09		DRWG NO.	MKA15-02005/1	