Symbol	Date	Rev. by	Notice	Check
1 x 7	220727	S.C.	IMPROVE	
2 x				
3 x				
4 x				

NIKKEN KOSAKUSHO WORKS., LTD. ALL Rights Reserved

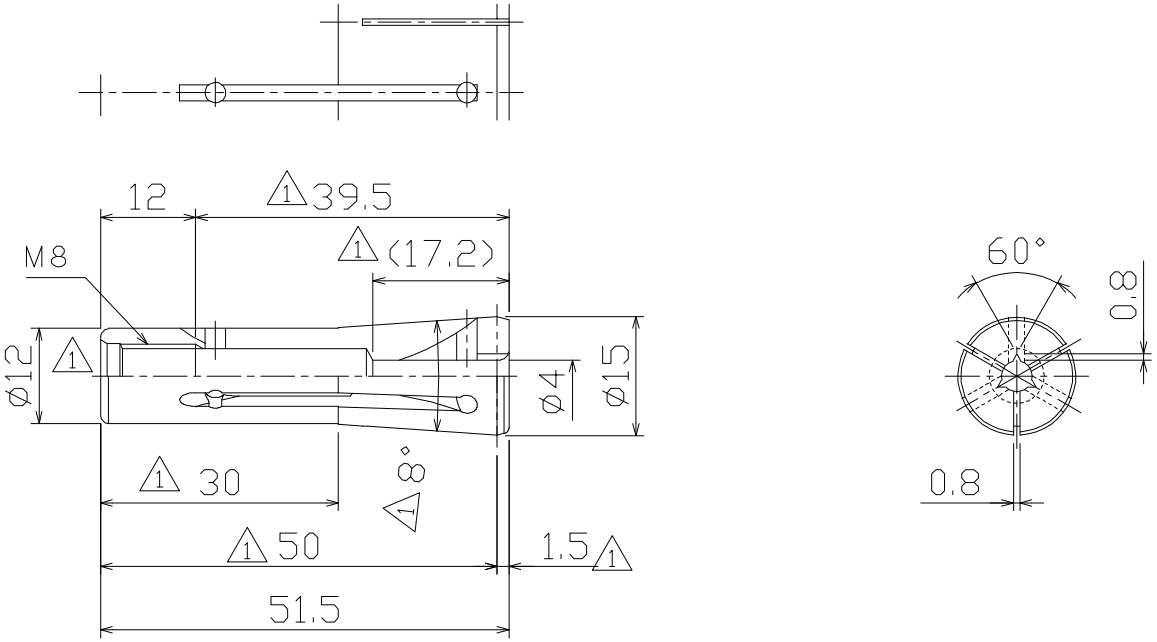

KIND	TITLE	CUSTOMER		
VMK8-J	VMK Collet			
MACHINE MODEL	CODE NO.	DESIGNED	CHECKED	APPROVED
	VMK8-4J	Maemura		
SCALE 1 : 1	NIKKEN KOSAKUSHO WORKS, LTD.	DIR-NAME	MKA1	
DATE 2010.04.30		DRWG NO.	MKA16-02004/1	